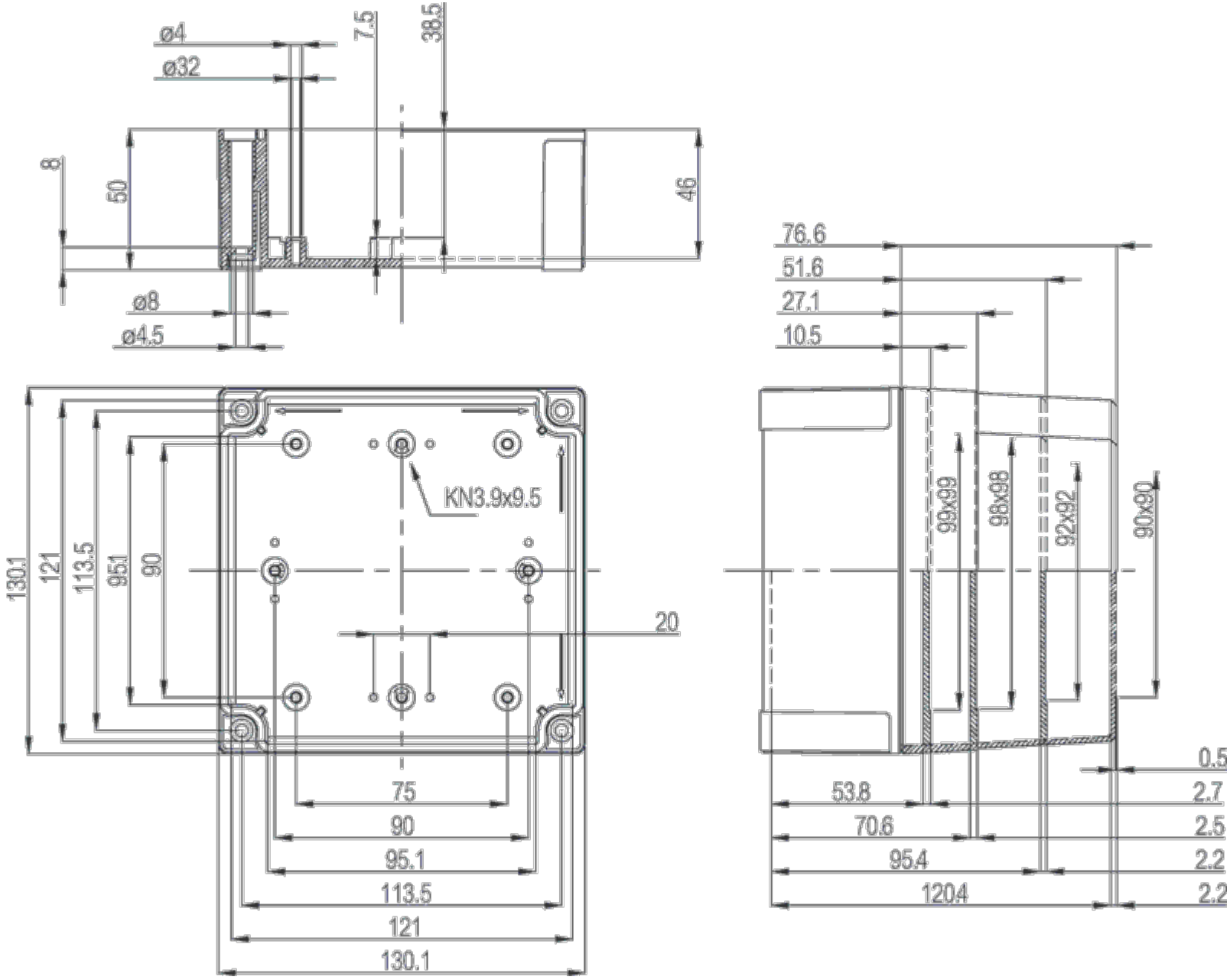
ø4
ø32
7.5
38.5
8
50
46
ø8
ø4.5
76.6
51.6
27.1
10.5
KN3.9x9.5
130.1
121
113.5
95.1
90
20
75
90
95.1
113.5
121
130.1
99x99
98x98
92x92
90x90
0.5
53.8
2.7
70.6
2.5
95.4
2.2
120.4
2.2